www.TotalCommercialEquipment.com.au 08 8363 5282

Pizza Bench

Pizza Make-up & Sandwich preparation counter - PM Series

Air vents blowing cold air over G/N pans

Lifting stainless steel cover lockable in 3 positions

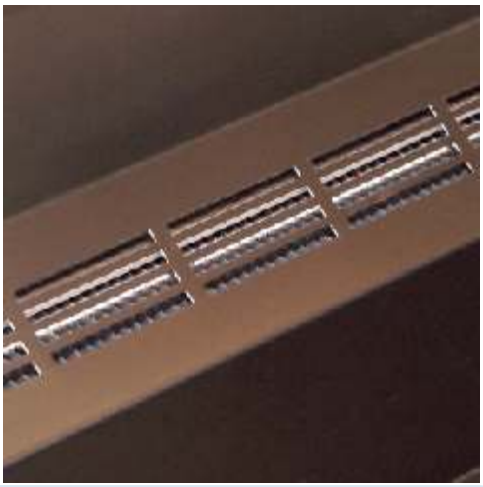

Full Length Refrigeration for Even Effective Cooling

DEALER:

KOLDTECH

The Technology of Excellence

PM-SERIES

Preparation / make-up bench

Front View

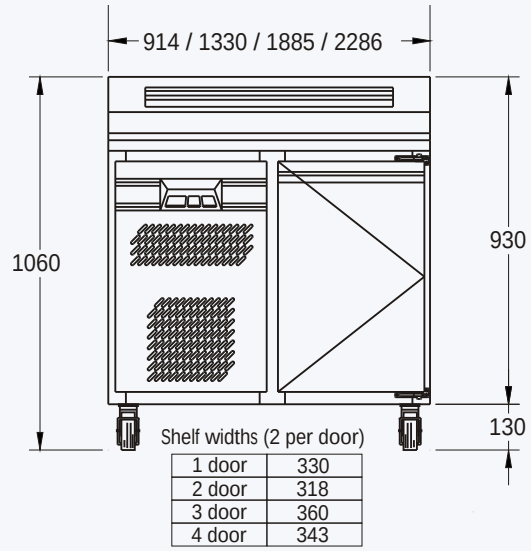

Shelf widths (2 per door)

1 door	330
2 door	318
3 door	360
4 door	343

Side View

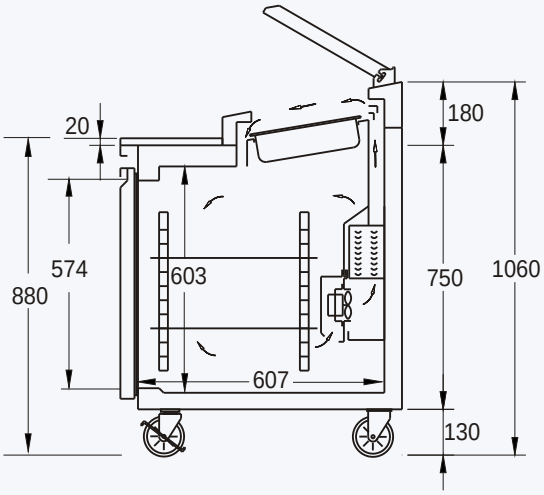

Top View

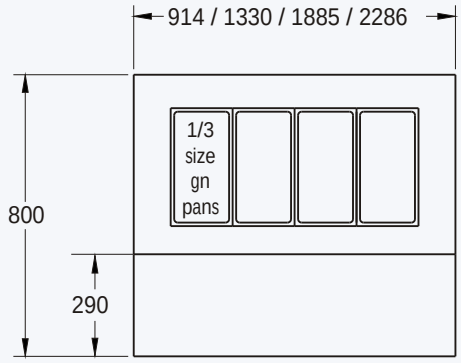

Performance and operating conditions

PM-series pizza/sandwich make-up counters are designed to hold product at below 5°C in both the upper ingredient well and the underbench refrigerator. PM series cabinets are rated to operate at ambient temperatures of up to 35°C.

Standard Features

Refrigeration System

Unique full-length back-mounted evaporator coil (using R-404a refrigerant) ensures consistent and effective cooling of the ingredient well and refrigerator along the entire cabinet. The self-contained motor for the refrigeration system is incorporated into the left hand end of the cabinet, and is serviced by a removable rear panel.

Controller

Adjustable micro-processor control with digital temperature display. Comes with separate power and cabinet light switch.

Body & Furnishings

Exterior made from 304 grade stainless steel in no.4 finish. Door frame and mullion are 430 grade stainless steel. Interior from 304 stainless steel in 2B finish. Pressure injected polyurethane foam insulation ensures uniformity and high structural strength. Doors are self-closing with magnetic gaskets. Mullions are capped with high strength ABS breaker strip to allow easy servicing.

Inclusions

Supplied with 1/3 100mm deep gastronorm pans to suit, and pan support bars
Supplied with 2 plastic coated zinc-plated steel shelves per door.

Options

- Polycarbonate cutting board
- Pizza make-up trays and racks
- Additional gastronorm pans
- Additional shelves & runners

Warranty

12 months on-site parts and labour warranty.

Technical Data

Pm-1-914 (1 DOOR)

Dimension L x D x H (cm)			91.4 x 80 x 106
Cooling capacity (Btu) - Condensing unit (Hp)			3412 - ½
Wire shelves	2 pieces	**Pans (100mm depth)**	4 x GN 1/3

Pm-2-1330 (2 DOOR)

Dimension L x D x H (cm)			133 x 80 x 106
Cooling capacity (Btu) - Condensing unit (Hp)			3412 - 3/4
Wire shelves	4 pieces	**Pans (100mm depth)**	7 x GN 1/3

Pm-3-1885 (3 DOOR)

Dimension L x D x H (cm)			188.5 x 80 x 106
Cooling capacity (Btu) / Condensing unit (Hp)			4435 / 3/4
Wire shelves	6 pieces	**Pans (100mm depth)**	10 x GN 1/3

Pm-4-2286 (4 DOOR)

Dimension L x D x H (cm)			228.6 x 80 x 106
Cooling capacity (Btu) / Condensing unit (Hp)			4435 /1
Wire shelves	8 pieces	**Pans (100mm depth)**	12 x GN 1/3

Continued product improvement is WELBILT Manufacturing Ltd policy. Specifications are subject to change without notice

Manufactured by Welbilt Manufacturing Ltd.
Imported by Tom Stoddart Pty Ltd,
215 Jackson Road Sunnybank Hills Qld 4109
Warranty, Service & dealer enquiries:
(07) 3344 2444 Fax: (07) 3345 6403

KOLDTECH
The Technology of Excellence

www.TotalCommercialEquipment.com.au 08 8363 5282